RADIAL CONTACT, C-TYPE

THIN SECTION BALL BEARINGS

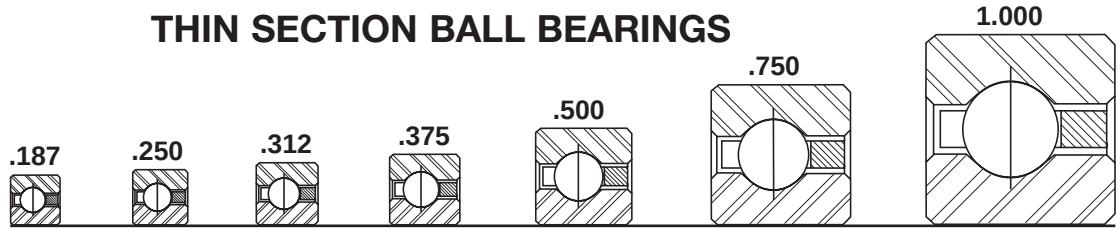

Series:	SAA	SA	SB	SC	SD	SF	SG
Cross Section Size:	3/16"	1/4"	5/16"	3/8"	1/2"	3/4"	1"

PART NUMBER*	NOMINAL DIMENSIONS												
	B Bore		D Outside Diameter		W Width		Land Diameter L_i -Inner Ring		Land Diameter L_o -Outer Ring		f_1 Housing Fillet		Ball Diameter
	in.	mm	in.	mm	in.	mm	in.	mm	in.	mm	in.	mm	in.
SAA10CL0*RBC	1.0000	25.400	1.3750	34.925	0.1875	4.763	1.141	28.98	1.234	31.34	0.015	0.38	3/32
SAA15CL0*RBC	1.5000	38.100	1.8750	47.625	0.1875	4.763	1.641	41.68	1.734	44.04	0.015	0.38	3/32
SAA17CL0*RBC	1.7500	44.450	2.1250	53.975	0.1875	4.760	1.890	48.00	1.985	50.42	0.015	0.38	3/32
SA020CP0*RBC	2.0000	50.800	2.5000	63.500	0.2500	6.350	2.188	55.58	2.313	58.75	0.025	0.64	1/8
SB020CP0*RBC	2.0000	50.800	2.6250	66.675	0.3125	7.938	2.234	56.74	2.391	60.73	0.032	0.81	5/32
SA025CP0*RBC	2.5000	63.500	3.0000	76.200	0.2500	6.350	2.688	68.28	2.813	71.45	0.025	0.64	1/8
SB025CP0*RBC	2.5000	63.500	3.1250	79.375	0.3125	7.938	2.734	69.44	2.891	73.43	0.032	0.81	5/32
SA030CP0*RBC	3.0000	76.200	3.5000	88.900	0.2500	6.350	3.188	80.98	3.313	84.15	0.025	0.64	1/8
SB030CP0*RBC	3.0000	76.200	3.6250	92.075	0.3125	7.938	3.234	82.14	3.391	86.13	0.032	0.81	5/32
SA035CP0*RBC	3.5000	88.900	4.0000	101.600	0.2500	6.350	3.688	93.68	3.813	96.85	0.025	0.64	1/8
SB035CP0*RBC	3.5000	88.900	4.1250	104.775	0.3125	7.938	3.734	94.84	3.897	98.98	0.032	0.81	5/32
SA040CP0*RBC	4.0000	101.600	4.5000	114.300	0.2500	6.350	4.188	106.38	4.313	109.55	0.025	0.64	1/8
SB040CP0*RBC	4.0000	101.600	4.6250	117.475	0.3125	7.938	4.234	107.54	4.391	111.53	0.032	0.81	5/32
SC040CP0*RBC	4.0000	101.600	4.7500	120.650	0.3750	9.525	4.281	108.74	4.469	113.51	0.040	1.02	3/16
SD040CP0*RBC	4.0000	101.600	5.0000	127.000	0.5000	12.700	4.375	111.13	4.625	117.48	0.060	1.52	1/4
SF040CP0*RBC	4.0000	101.600	5.5000	139.700	0.7500	19.050	4.563	115.90	4.938	125.43	0.080	2.03	3/8
SG040CP0*RBC	4.0000	101.600	6.0000	152.400	1.0000	25.400	4.750	120.65	5.250	133.35	0.080	2.03	1/2
SA042CP0*RBC	4.2500	107.950	4.7500	120.650	0.2500	6.350	4.438	112.73	4.563	115.90	0.025	0.64	1/8
SB042CP0*RBC	4.2500	107.950	4.8750	123.825	0.3125	7.938	4.484	113.89	4.641	117.88	0.032	0.81	5/32
SC042CP0*RBC	4.2500	107.950	5.0000	127.000	0.3750	9.525	4.531	115.09	4.719	119.86	0.040	1.02	3/16
SD042CP0*RBC	4.2500	107.950	5.2500	133.350	0.5000	12.700	4.625	117.48	4.875	123.83	0.060	1.52	1/4
SF042CP0*RBC	4.2500	107.950	5.7500	146.050	0.7500	19.050	4.813	122.25	5.188	131.78	0.080	2.03	3/8
SG042CP0*RBC	4.2500	107.950	6.2500	158.750	1.0000	25.400	5.000	127.00	5.500	139.70	0.080	2.03	1/2
SA045CP0*RBC	4.5000	114.300	5.0000	127.000	0.2500	6.350	4.688	119.08	4.813	122.25	0.025	0.64	1/8
SB045CP0*RBC	4.5000	114.300	5.1250	130.175	0.3125	7.938	4.734	120.24	4.891	124.23	0.032	0.81	5/32
SC045CP0*RBC	4.5000	114.300	5.2500	133.350	0.3750	9.525	4.781	121.44	4.969	126.21	0.040	1.02	3/16
SD045CP0*RBC	4.5000	114.300	5.5000	139.700	0.5000	12.700	4.875	123.83	5.125	130.18	0.060	1.52	1/4
SF045CP0*RBC	4.5000	114.300	6.0000	152.400	0.7500	19.050	5.063	128.60	5.438	138.13	0.080	2.03	3/8
SG045CP0*RBC	4.5000	114.300	6.5000	165.100	1.0000	25.400	5.250	133.35	5.750	146.05	0.080	2.03	1/2
SA047CP0*RBC	4.7500	120.650	5.2500	133.350	0.2500	6.350	4.938	125.43	5.063	128.60	0.025	0.64	1/8
SB047CP0*RBC	4.7500	120.650	5.3750	136.525	0.3125	7.938	4.984	126.59	5.141	130.58	0.032	0.81	5/32
SC047CP0*RBC	4.7500	120.650	5.5000	139.700	0.3750	9.525	5.031	127.79	5.219	132.56	0.040	1.02	3/16
SD047CP0*RBC	4.7500	120.650	5.7500	146.050	0.5000	12.700	5.125	130.18	5.375	136.53	0.060	1.52	1/4
SF047CP0*RBC	4.7500	120.650	6.2500	158.750	0.7500	19.050	5.313	134.95	5.688	144.48	0.080	2.03	3/8
SG047CP0*RBC	4.7500	120.650	6.7500	171.450	1.0000	25.400	5.500	139.70	6.000	152.40	0.080	2.03	1/2
SA050CP0*RBC	5.0000	127.000	5.5000	139.700	0.2500	6.350	5.188	131.78	5.313	134.95	0.025	0.64	1/8
SB050CP0*RBC	5.0000	127.000	5.6250	142.875	0.3125	7.938	5.234	132.94	5.391	136.93	0.032	0.81	5/32
SC050CP0*RBC	5.0000	127.000	5.7500	146.050	0.3750	9.525	5.281	134.14	5.469	138.91	0.040	1.02	3/16
SD050CP0*RBC	5.0000	127.000	6.0000	152.400	0.5000	12.700	5.375	136.53	5.625	142.88	0.060	1.52	1/4
SF050CP0*RBC	5.0000	127.000	6.5000	165.100	0.7500	19.050	5.563	141.30	5.938	150.83	0.080	2.03	3/8
SG050CP0*RBC	5.0000	127.000	7.0000	177.800	1.0000	25.400	5.750	146.05	6.250	158.75	0.080	2.03	1/2
SA055CP0*RBC	5.5000	139.700	6.0000	152.400	0.2500	6.350	5.688	144.48	5.813	147.65	0.025	0.64	1/8
SB055CP0*RBC	5.5000	139.700	6.1250	155.575	0.3125	7.938	5.734	145.64	5.891	149.63	0.032	0.81	5/32
SC055CP0*RBC	5.5000	139.700	6.2500	158.750	0.3750	9.525	5.781	146.84	5.969	151.61	0.040	1.02	3/16
SD055CP0*RBC	5.5000	139.700	6.5000	165.100	0.5000	12.700	5.875	149.23	6.125	155.58	0.060	1.52	1/4
SF055CP0*RBC	5.5000	139.700	7.0000	177.800	0.7500	19.050	6.063	154.00	6.438	163.53	0.080	2.03	3/8

*The alphanumeric identification system is used under license.

- 440C Stainless Steel
- Large Diameter
- Light Weight
- Small Cross Section
- Snap-Over Ball Separator

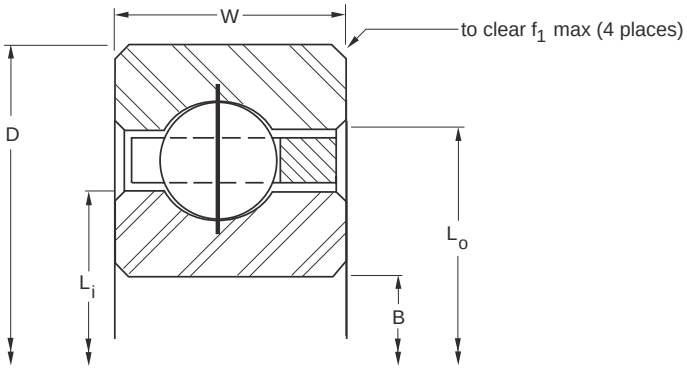

Ball Quantity	Approx. Weight		LOAD RATINGS												Limiting Speed (RPM)
			Radial				Thrust				Moment				
			Static		Dynamic		Static		Dynamic		Static		Dynamic		
	lbs.	kg	lbf	N	lbf	N	lbf	N	lbf	N	lbf - in	Nm	lbf - in	Nm	
21	0.03	0.014	290	1,290	300	1,330	480	2,140	880	3,910	110	10	210	25	16,840
29	0.04	0.018	400	1,780	350	1,560	650	2,890	1,020	4,540	220	25	350	40	11,850
33	0.06	0.027	540	2,402	455	2,033	865	3,847	1,330	5,916	355	40	545	62	10,320
27	0.10	0.045	680	3,020	560	2,490	1,080	4,800	1,640	7,300	490	55	740	80	8,890
23	0.16	0.073	930	4,140	800	3,560	1,460	6,490	2,320	10,320	680	80	1,070	120	8,650
33	0.13	0.059	830	3,690	610	2,710	1,310	5,830	1,770	7,870	720	80	970	110	7,270
28	0.20	0.091	1,140	5,070	860	3,830	1,750	7,780	2,510	11,170	990	110	1,410	160	7,110
39	0.15	0.068	990	4,400	650	2,890	1,530	6,810	1,880	8,360	990	110	1,220	140	6,150
33	0.24	0.109	1,340	5,960	920	4,090	2,050	9,120	2,680	11,920	1,360	150	1,770	200	6,040
45	0.18	0.082	1,140	5,070	690	3,070	1,750	7,780	1,990	8,850	1,320	150	1,490	170	5,330
38	0.27	0.122	1,540	6,850	970	4,310	2,340	10,410	2,810	12,500	1,780	200	2,140	240	5,250
51	0.19	0.086	1,290	5,740	720	3,200	1,980	8,810	2,080	9,250	1,680	190	1,770	200	4,710
43	0.30	0.136	1,750	7,780	1,020	4,540	2,630	11,700	2,950	13,120	2,270	260	2,550	290	4,640
35	0.45	0.204	2,100	9,340	1,290	5,740	3,110	13,830	3,740	16,640	2,720	310	3,280	370	4,570
27	0.78	0.354	3,080	13,700	2,250	10,010	4,950	22,020	6,520	29,000	4,450	500	5,870	660	4,440
19	1.90	0.862	5,360	23,840	3,940	17,530	7,980	35,500	11,420	50,800	7,580	860	10,850	1,230	4,210
15	3.60	1.633	8,210	36,520	6,700	29,800	12,960	57,650	19,440	86,470	12,960	1,460	19,440	2,200	4,000
54	0.20	0.091	1,370	6,090	730	3,250	2,090	9,300	2,110	9,390	1,880	210	1,900	210	4,440
45	0.31	0.141	1,830	8,140	1,030	4,580	2,740	12,190	3,000	13,340	2,500	280	2,730	310	4,380
37	0.47	0.213	2,220	9,880	1,320	5,870	3,270	14,550	3,830	17,040	3,030	340	3,550	400	4,320
28	0.83	0.376	3,190	14,190	2,270	10,100	5,110	22,730	6,580	29,270	4,860	550	6,250	710	4,210
20	2.00	0.907	5,640	25,090	4,070	18,100	8,400	37,370	11,810	52,530	8,400	950	11,810	1,330	4,000
15	3.80	1.724	8,210	36,520	6,700	29,800	12,960	57,650	19,440	86,470	13,600	1,540	20,410	2,310	3,810
57	0.22	0.100	1,440	6,410	750	3,340	2,200	9,790	2,170	9,650	2,090	240	2,060	230	4,210
48	0.33	0.150	1,950	8,670	1,060	4,720	2,920	12,990	3,080	13,700	2,810	320	2,960	330	4,160
39	0.48	0.218	2,340	10,410	1,350	6,010	3,440	15,300	3,910	17,390	3,360	380	3,810	430	4,100
30	0.88	0.399	3,420	15,210	2,350	10,450	5,460	24,290	6,820	30,340	5,460	620	6,820	770	4,000
21	2.10	0.953	5,930	26,380	4,210	18,730	8,820	39,230	12,200	54,270	9,270	1,050	12,810	1,450	3,810
16	4.00	1.814	8,760	38,970	7,000	31,140	13,820	61,470	20,290	90,250	15,200	1,720	22,320	2,520	3,640
60	0.23	0.104	1,520	6,760	760	3,380	2,310	10,280	2,220	9,880	2,310	260	2,220	250	4,000
50	0.34	0.154	2,030	9,030	1,070	4,760	3,030	13,480	3,110	13,830	3,070	350	3,140	350	3,950
41	0.50	0.227	2,460	10,940	1,370	6,090	3,610	16,060	3,970	17,660	3,700	420	4,070	460	3,900
31	0.94	0.426	3,530	15,700	2,360	10,500	5,620	25,000	6,840	30,430	5,910	670	7,180	810	3,810
22	2.20	0.998	6,210	27,620	4,310	19,170	9,220	41,010	12,490	55,560	10,140	1,150	13,740	1,550	3,640
17	4.10	1.860	9,300	41,370	7,290	32,430	14,680	65,300	21,130	93,990	16,890	1,910	24,300	2,750	3,480
63	0.24	0.109	1,590	7,070	770	3,430	2,420	10,760	2,240	9,960	2,540	290	2,350	270	3,810
53	0.38	0.172	2,150	9,560	1,100	4,890	3,210	14,280	3,190	14,190	3,410	390	3,390	380	3,760
43	0.58	0.263	2,590	11,520	1,390	6,180	3,780	16,810	4,040	17,970	4,060	460	4,340	490	3,720
33	1.00	0.454	3,760	16,730	2,430	10,810	5,970	26,560	7,040	31,320	6,570	740	7,740	870	3,640
23	2.30	1.043	6,490	28,870	4,380	19,480	9,600	42,700	12,710	56,540	11,050	1,250	14,620	1,650	3,480
18	4.30	1.950	9,850	43,810	7,570	33,670	15,550	69,170	21,950	97,640	18,660	2,110	26,340	2,980	3,330
69	0.25	0.113	1,750	7,780	800	3,560	2,650	11,790	2,320	10,320	3,040	340	2,660	300	3,480
58	0.41	0.186	2,360	10,500	1,130	5,030	3,500	15,570	3,280	14,590	4,070	460	3,810	430	3,440
47	0.59	0.268	2,830	12,590	1,440	6,410	4,110	18,280	4,170	18,550	4,830	550	4,900	550	3,400
36	1.06	0.481	4,100	18,240	2,510	11,170	6,480	28,820	7,270	32,340	7,780	880	8,720	990	3,330
25	2.50	1.134	7,050	31,360	4,540	20,190	10,370	46,130	13,170	58,580	12,970	1,470	16,460	1,860	3,200

Refer to the Engineering section for load and speed limitations.

RADIAL CONTACT, C-TYPE

THIN SECTION BALL BEARINGS

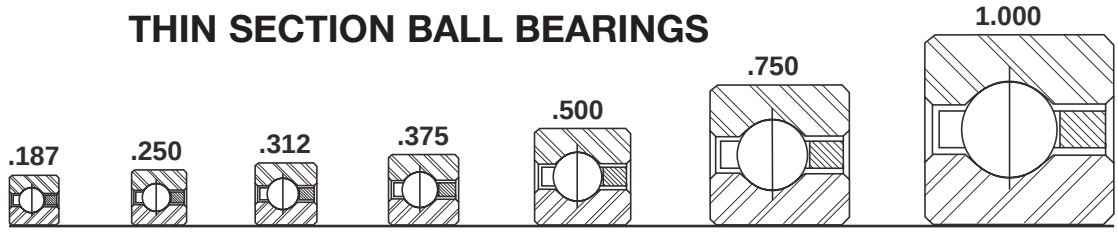

Series:	SAA	SA	SB	SC	SD	SF	SG
Cross Section Size:	3/16"	1/4"	5/16"	3/8"	1/2"	3/4"	1"

PART NUMBER*	NOMINAL DIMENSIONS												
	B Bore		D Outside Diameter		W Width		Land Diameter L_i -Inner Ring		Land Diameter L_o -Outer Ring		f_1 Housing Fillet		Ball Diameter
	in.	mm	in.	mm	in.	mm	in.	mm	in.	mm	in.	mm	in.
SG055CP0*RBC	5.5000	139.700	7.5000	190.500	1.0000	25.400	6.250	158.75	6.750	171.45	0.080	2.03	1/2
SA060CP0*RBC	6.0000	152.400	6.5000	165.100	0.2500	6.350	6.188	157.18	6.313	160.35	0.025	0.64	1/8
SB060CP0*RBC	6.0000	152.400	6.6250	168.275	0.3125	7.938	6.234	158.34	6.391	162.33	0.032	0.81	5/32
SC060CP0*RBC	6.0000	152.400	6.7500	171.450	0.3750	9.525	6.281	159.54	6.469	164.31	0.040	1.02	3/16
SD060CP0*RBC	6.0000	152.400	7.0000	177.800	0.5000	12.700	6.375	161.93	6.625	168.28	0.060	1.52	1/4
SF060CP0*RBC	6.0000	152.400	7.5000	190.500	0.7500	19.050	6.563	166.70	6.938	176.23	0.080	2.03	3/8
SG060CP0*RBC	6.0000	152.400	8.0000	203.200	1.0000	25.400	6.750	171.45	7.250	184.15	0.080	2.03	1/2
SA065CP0*RBC	6.5000	165.100	7.0000	177.800	0.2500	6.350	6.688	169.88	6.813	173.05	0.025	0.64	1/8
SB065CP0*RBC	6.5000	165.100	7.1250	180.975	0.3125	7.938	6.734	171.04	6.891	175.03	0.032	0.81	5/32
SC065CP0*RBC	6.5000	165.100	7.2500	184.150	0.3750	9.525	6.781	172.24	6.969	177.01	0.040	1.02	3/16
SD065CP0*RBC	6.5000	165.100	7.5000	190.500	0.5000	12.700	6.875	174.63	7.125	180.98	0.060	1.52	1/4
SF065CP0*RBC	6.5000	165.100	8.0000	203.200	0.7500	19.050	7.063	179.40	7.438	188.93	0.080	2.03	3/8
SG065CP0*RBC	6.5000	165.100	8.5000	215.900	1.0000	25.400	7.250	184.15	7.750	196.85	0.080	2.03	1/2
SA070CP0*RBC	7.0000	177.800	7.5000	190.500	0.2500	6.350	7.188	182.58	7.313	185.75	0.025	0.64	1/8
SB070CP0*RBC	7.0000	177.800	7.6250	193.675	0.3125	7.938	7.234	183.74	7.391	187.73	0.032	0.81	5/32
SC070CP0*RBC	7.0000	177.800	7.7500	196.850	0.3750	9.525	7.281	184.94	7.469	189.71	0.040	1.02	3/16
SD070CP0*RBC	7.0000	177.800	8.0000	203.200	0.5000	12.700	7.375	187.33	7.625	193.68	0.060	1.52	1/4
SF070CP0*RBC	7.0000	177.800	8.5000	215.900	0.7500	19.050	7.563	192.10	7.938	201.63	0.080	2.03	3/8
SG070CP0*RBC	7.0000	177.800	9.0000	228.600	1.0000	25.400	7.750	196.85	8.250	209.55	0.080	2.03	1/2
SA075CP0*RBC	7.5000	190.500	8.0000	203.200	0.2500	6.350	7.688	195.28	7.813	198.45	0.025	0.64	1/8
SB075CP0*RBC	7.5000	190.500	8.1250	206.375	0.3125	7.938	7.734	196.44	7.891	200.43	0.032	0.81	5/32
SC075CP0*RBC	7.5000	190.500	8.2500	209.550	0.3750	9.525	7.781	197.64	7.969	202.41	0.040	1.02	3/16
SD075CP0*RBC	7.5000	190.500	8.5000	215.900	0.5000	12.700	7.875	200.03	8.125	206.38	0.060	1.52	1/4
SF075CP0*RBC	7.5000	190.500	9.0000	228.600	0.7500	19.050	8.063	204.80	8.438	214.33	0.080	2.03	3/8
SG075CP0*RBC	7.5000	190.500	9.5000	241.300	1.0000	25.400	8.250	209.55	8.750	222.25	0.080	2.03	1/2
SA080CP0*RBC	8.0000	203.200	8.5000	215.900	0.2500	6.350	8.188	207.98	8.313	211.15	0.025	0.64	1/8
SB080CP0*RBC	8.0000	203.200	8.6250	219.075	0.3125	7.938	8.234	209.14	8.391	213.13	0.032	0.81	5/32
SC080CP0*RBC	8.0000	203.200	8.7500	222.250	0.3750	9.525	8.281	210.34	8.469	215.11	0.040	1.02	3/16
SD080CP0*RBC	8.0000	203.200	9.0000	228.600	0.5000	12.700	8.375	212.73	8.625	219.08	0.060	1.52	1/4
SF080CP0*RBC	8.0000	203.200	9.5000	241.300	0.7500	19.050	8.563	217.50	8.938	227.03	0.080	2.03	3/8
SG080CP0*RBC	8.0000	203.200	10.0000	254.000	1.0000	25.400	8.750	222.25	9.250	234.95	0.080	2.03	1/2
SA090CP0*RBC	9.0000	228.600	9.5000	241.300	0.2500	6.350	9.188	233.38	9.313	236.55	0.025	0.64	1/8
SB090CP0*RBC	9.0000	228.600	9.6250	244.475	0.3125	7.938	9.234	234.54	9.391	238.53	0.032	0.81	5/32
SC090CP0*RBC	9.0000	228.600	9.7500	247.650	0.3750	9.525	9.281	235.74	9.469	240.51	0.040	1.02	3/16
SD090CP0*RBC	9.0000	228.600	10.0000	254.000	0.5000	12.700	9.375	238.13	9.625	244.48	0.060	1.52	1/4
SF090CP0*RBC	9.0000	228.600	10.5000	266.700	0.7500	19.050	9.563	242.90	9.938	252.43	0.080	2.03	3/8
SG090CP0*RBC	9.0000	228.600	11.0000	279.400	1.0000	25.400	9.750	247.65	10.250	260.35	0.080	2.03	1/2
SA100CP0*RBC	10.0000	254.000	10.5000	266.700	0.2500	6.350	10.188	258.78	10.313	261.95	0.025	0.64	1/8
SB100CP0*RBC	10.0000	254.000	10.6250	269.875	0.3125	7.938	10.234	259.94	10.391	263.93	0.032	0.81	5/32
SC100CP0*RBC	10.0000	254.000	10.7500	273.050	0.3750	9.525	10.281	261.14	10.469	265.91	0.040	1.02	3/16
SD100CP0*RBC	10.0000	254.000	11.0000	279.400	0.5000	12.700	10.375	263.53	10.625	269.88	0.060	1.52	1/4
SF100CP0*RBC	10.0000	254.000	11.5000	292.100	0.7500	19.050	10.563	268.30	10.938	277.83	0.080	2.03	3/8
SG100CP0*RBC	10.0000	254.000	12.0000	304.800	1.0000	25.400	10.750	273.05	11.250	285.75	0.080	2.03	1/2

*The alphanumeric identification system is used under license.

- 440C Stainless Steel
- Large Diameter
- Light Weight
- Small Cross Section
- Snap-Over Ball Separator

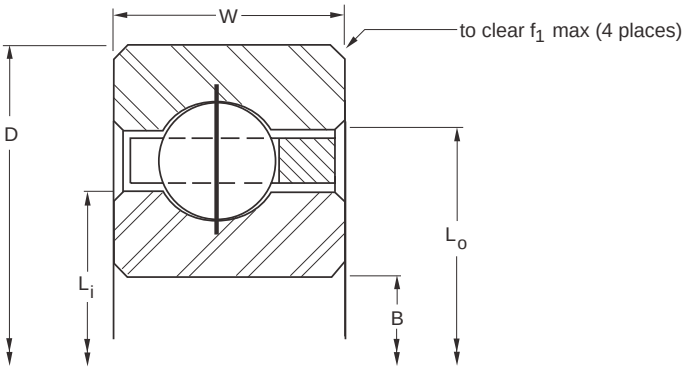

Ball Quantity	Approx. Weight		LOAD RATINGS												Limiting Speed (RPM)
			Radial				Thrust				Moment				
			Static		Dynamic		Static		Dynamic		Static		Dynamic		
	lbs.	kg	lbf	N	lbf	N	lbf	N	lbf	N	lbf - in	Nm	lbf - in	Nm	
19	4.70	2.132	10,400	46,260	7,850	34,920	16,410	73,000	22,750	101,200	21,330	2,410	29,580	3,340	3,080
75	0.28	0.127	1,900	8,450	830	3,690	2,870	12,770	2,420	10,760	3,590	410	3,020	340	3,200
63	0.44	0.200	2,560	11,390	1,170	5,200	3,790	16,860	3,380	15,030	4,790	540	4,270	480	3,170
51	0.63	0.286	3,070	13,660	1,490	6,630	4,450	19,790	4,320	19,220	5,670	640	5,510	620	3,140
39	1.16	0.526	4,450	19,790	2,580	11,480	6,990	31,090	7,500	33,360	9,090	1,030	9,740	1,100	3,080
27	2.70	1.225	7,620	33,900	4,660	20,730	11,130	49,510	13,530	60,180	15,030	1,700	18,260	2,060	2,960
21	5.10	2.313	11,490	51,110	8,390	37,320	18,140	80,690	24,320	108,180	25,390	2,870	34,050	3,850	2,860
81	0.30	0.136	2,050	9,120	850	3,780	3,100	13,790	2,450	10,900	4,180	470	3,310	370	2,960
68	0.47	0.213	2,760	12,280	1,200	5,340	4,080	18,150	3,470	15,440	5,560	630	4,730	530	2,940
55	0.68	0.308	3,310	14,720	1,530	6,810	4,790	21,310	4,440	19,750	6,580	740	6,110	690	2,910
42	1.22	0.553	4,790	21,310	2,650	11,790	7,500	33,360	7,680	34,160	10,500	1,190	10,760	1,220	2,860
29	2.90	1.315	8,180	36,390	4,790	21,310	11,900	52,930	13,900	61,830	17,250	1,950	20,160	2,280	2,760
22	5.40	2.449	12,040	53,560	8,520	37,900	18,910	84,120	24,700	109,870	28,360	3,200	37,050	4,190	2,670
87	0.31	0.141	2,200	9,790	870	3,870	3,320	14,770	2,520	11,210	4,810	540	3,660	410	2,760
73	0.50	0.227	2,970	13,210	1,240	5,520	4,380	19,480	3,600	16,010	6,400	720	5,260	590	2,740
59	0.73	0.331	3,550	15,790	1,570	6,980	5,120	22,770	4,550	20,240	7,550	850	6,710	760	2,710
45	1.31	0.594	5,130	22,820	2,730	12,140	8,020	35,670	7,910	35,190	12,030	1,360	11,870	1,340	2,670
31	3.20	1.451	8,750	38,920	4,920	21,890	12,670	56,360	14,280	63,520	19,640	2,220	22,130	2,500	2,580
24	5.80	2.631	13,130	58,410	8,880	39,500	20,520	91,280	25,750	114,540	32,840	3,710	41,210	4,660	2,500
93	0.34	0.154	2,350	10,450	890	3,960	3,540	15,750	2,580	11,480	5,490	620	4,000	450	2,580
78	0.53	0.240	3,170	14,100	1,280	5,690	4,670	20,770	3,710	16,500	7,300	820	5,800	660	2,560
63	0.78	0.354	3,790	16,860	1,600	7,120	5,450	24,240	4,640	20,640	8,590	970	7,300	820	2,540
48	1.41	0.640	5,470	24,330	2,800	12,460	8,530	37,940	8,120	36,120	13,650	1,540	12,990	1,470	2,500
33	3.40	1.542	9,310	41,410	5,040	22,420	13,440	59,780	14,610	64,990	22,170	2,500	24,100	2,720	2,420
25	6.10	2.767	10,640	47,330	8,960	39,860	21,270	94,610	25,990	115,610	36,160	4,090	44,190	4,990	2,350
99	0.38	0.172	2,500	11,120	910	4,050	3,770	16,770	2,640	11,740	6,220	700	4,350	490	2,420
83	0.57	0.259	3,370	14,990	1,280	5,690	4,960	22,060	3,720	16,550	8,240	930	6,190	700	2,410
67	0.84	0.381	4,030	17,930	1,650	7,340	5,790	25,760	4,770	21,220	9,700	1,100	7,990	900	2,390
51	1.53	0.694	5,810	25,840	2,860	12,720	9,040	40,210	8,290	36,880	15,370	1,740	14,090	1,590	2,350
35	3.50	1.588	9,880	43,950	5,140	22,860	14,200	63,160	14,900	66,280	24,840	2,810	26,070	2,950	2,290
27	6.50	2.948	14,770	65,700	9,300	41,370	22,890	101,820	26,960	119,920	41,200	4,650	48,520	5,480	2,220
111	0.44	0.200	2,810	12,500	940	4,180	4,210	18,730	2,730	12,140	7,800	880	5,050	570	2,160
93	0.66	0.299	3,780	16,810	1,330	5,920	5,540	24,640	3,860	17,170	10,320	1,170	7,190	810	2,150
75	0.94	0.426	4,510	20,060	1,730	7,700	6,470	28,780	5,020	22,330	12,120	1,370	9,410	1,060	2,130
57	1.72	0.780	6,500	28,910	2,970	13,210	10,060	44,750	8,620	38,340	19,120	2,160	16,390	1,850	2,110
39	3.90	1.769	11,000	48,930	5,360	23,840	15,740	70,020	15,550	69,170	30,690	3,470	30,320	3,430	2,050
30	7.20	3.266	16,420	73,040	9,720	43,240	25,270	112,410	28,200	125,440	50,540	5,710	56,390	6,370	2,000
123	0.50	0.227	3,110	13,830	990	4,400	4,660	20,730	2,860	12,720	9,560	1,080	5,860	660	1,950
103	0.73	0.331	4,190	18,640	1,400	6,230	6,130	27,270	4,050	18,020	12,630	1,430	8,350	940	1,940
83	1.06	0.481	4,990	22,200	1,781	7,920	7,140	31,760	5,170	23,000	14,810	1,670	10,730	1,210	1,930
63	1.88	0.853	7,180	31,940	3,070	13,660	11,080	49,290	8,900	39,590	23,270	2,630	18,680	2,110	1,900
43	4.30	1.950	12,130	53,960	5,550	24,690	17,260	76,780	16,060	71,440	37,110	4,190	34,530	3,900	1,860
33	7.90	3.583	18,060	80,330	10,040	44,660	27,620	122,860	29,110	129,490	60,760	6,860	64,040	7,240	1,820

Refer to the Engineering section for load and speed limitations.

RADIAL CONTACT, C-TYPE

THIN SECTION BALL BEARINGS

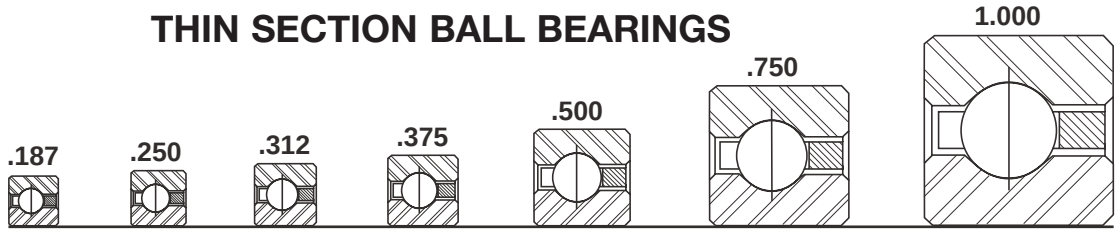

Series:	SAA	SA	SB	SC	SD	SF	SG
Cross Section Size:	3/16"	1/4"	5/16"	3/8"	1/2"	3/4"	1"

PART NUMBER*	NOMINAL DIMENSIONS												
	B Bore		D Outside Diameter		W Width		Land Diameter L_i -Inner Ring		Land Diameter L_o -Outer Ring		f_1 Housing Fillet		Ball Diameter
	in.	mm	in.	mm	in.	mm	in.	mm	in.	mm	in.	mm	in.
SA110CP0*RBC	11.0000	279.400	11.5000	292.100	0.2500	6.350	11.188	284.18	11.313	287.35	0.025	0.64	1/8
SB110CP0*RBC	11.0000	279.400	11.6250	295.275	0.3125	7.938	11.234	285.34	11.391	289.33	0.032	0.81	5/32
SC110CP0*RBC	11.0000	279.400	11.7500	298.450	0.3750	9.525	11.281	286.54	11.469	291.31	0.040	1.02	3/16
SD110CP0*RBC	11.0000	279.400	12.0000	304.800	0.5000	12.700	11.375	288.93	11.625	295.28	0.060	1.52	1/4
SF110CP0*RBC	11.0000	279.400	12.5000	317.500	0.7500	19.050	11.563	293.70	11.938	303.23	0.080	2.03	3/8
SG110CP0*RBC	11.0000	279.400	13.0000	330.200	1.0000	25.400	11.750	298.45	12.250	311.15	0.080	2.03	1/2
SA120CP0*RBC	12.0000	304.800	12.5000	317.500	0.2500	6.350	12.188	309.58	12.313	312.75	0.025	0.64	1/8
SB120CP0*RBC	12.0000	304.800	12.6250	320.675	0.3125	7.938	12.234	310.74	12.391	314.73	0.032	0.81	5/32
SC120CP0*RBC	12.0000	304.800	12.7500	323.850	0.3750	9.525	12.281	311.94	12.469	316.71	0.040	1.02	3/16
SD120CP0*RBC	12.0000	304.800	13.0000	330.200	0.5000	12.700	12.375	314.33	12.625	320.68	0.060	1.52	1/4
SF120CP0*RBC	12.0000	304.800	13.5000	342.900	0.7500	19.050	12.563	319.10	12.938	328.63	0.080	2.03	3/8
SG120CP0*RBC	12.0000	304.800	14.0000	355.600	1.0000	25.400	12.750	323.85	13.250	336.55	0.080	2.03	1/2
SB140CP0*RBC	14.0000	355.600	14.6250	371.475	0.3125	7.938	14.234	361.54	14.391	365.53	0.032	0.81	5/32
SC140CP0*RBC	14.0000	355.600	14.7500	374.650	0.3750	9.525	14.281	362.74	14.469	367.51	0.040	1.02	3/16
SD140CP0*RBC	14.0000	355.600	15.0000	381.000	0.5000	12.700	14.375	365.13	14.625	371.48	0.060	1.52	1/4
SF140CP0*RBC	14.0000	355.600	15.5000	393.700	0.7500	19.050	14.563	369.90	14.938	379.43	0.080	2.03	3/8
SG140CP0*RBC	14.0000	355.600	16.0000	406.400	1.0000	25.400	14.750	374.65	15.250	387.35	0.080	2.03	1/2
SB160CP0*RBC	16.0000	406.400	16.6250	422.275	0.3125	7.938	16.234	412.34	16.391	416.33	0.032	0.81	5/32
SC160CP0*RBC	16.0000	406.400	16.7500	425.450	0.3750	9.525	16.281	413.54	16.469	418.31	0.040	1.02	3/16
SD160CP0*RBC	16.0000	406.400	17.0000	431.800	0.5000	12.700	16.375	415.93	16.625	422.28	0.060	1.52	1/4
SF160CP0*RBC	16.0000	406.400	17.5000	444.500	0.7500	19.050	16.563	420.70	16.938	430.23	0.080	2.03	3/8
SG160CP0*RBC	16.0000	406.400	18.0000	457.200	1.0000	25.400	16.750	425.45	17.250	438.15	0.080	2.03	1/2
SB180CP0*RBC	18.0000	457.200	18.6250	473.075	0.3125	7.938	18.234	463.14	18.391	467.13	0.032	0.81	5/32
SC180CP0*RBC	18.0000	457.200	18.7500	476.250	0.3750	9.525	18.281	464.34	18.469	469.11	0.040	1.02	3/16
SD180CP0*RBC	18.0000	457.200	19.0000	482.600	0.5000	12.700	18.375	466.73	18.625	473.08	0.060	1.52	1/4
SF180CP0*RBC	18.0000	457.200	19.5000	495.300	0.7500	19.050	18.563	471.50	18.938	481.03	0.080	2.03	3/8
SG180CP0*RBC	18.0000	457.200	20.0000	508.000	1.0000	25.400	18.750	476.25	19.250	488.95	0.080	2.03	1/2
SB200CP0*RBC	20.0000	508.000	20.6250	523.875	0.3125	7.938	20.234	513.94	20.391	517.93	0.032	0.81	5/32
SC200CP0*RBC	20.0000	508.000	20.7500	527.050	0.3750	9.525	20.281	515.14	20.469	519.91	0.040	1.02	3/16
SD200CP0*RBC	20.0000	508.000	21.0000	533.400	0.5000	12.700	20.375	517.53	20.625	523.88	0.060	1.52	1/4
SF200CP0*RBC	20.0000	508.000	21.5000	546.100	0.7500	19.050	20.563	522.30	20.938	531.83	0.080	2.03	3/8
SG200CP0*RBC	20.0000	508.000	22.0000	558.800	1.0000	25.400	20.750	527.05	21.250	539.75	0.080	2.03	1/2
SC250CP0*RBC	25.0000	635.000	25.7500	654.050	0.3750	9.525	25.281	642.14	25.469	646.91	0.040	1.02	3/16
SD250CP0*RBC	25.0000	635.000	26.0000	660.400	0.5000	12.700	25.375	644.53	25.625	650.88	0.060	1.52	1/4
SF250CP0*RBC	25.0000	635.000	26.5000	673.100	0.7500	19.050	25.563	649.30	25.938	658.83	0.080	2.03	3/8
SG250CP0*RBC	25.0000	635.000	27.0000	685.800	1.0000	25.400	25.750	654.05	26.250	666.75	0.080	2.03	1/2
SC300CP0*RBC	30.0000	762.000	30.7500	781.050	0.3750	9.525	30.281	769.14	30.469	773.91	0.040	1.02	3/16
SD300CP0*RBC	30.0000	762.000	31.0000	787.400	0.5000	12.700	30.375	771.53	30.625	777.88	0.060	1.52	1/4
SF300CP0*RBC	30.0000	762.000	31.5000	800.100	0.7500	19.050	30.563	776.30	30.938	785.83	0.080	2.03	3/8
SG300CP0*RBC	30.0000	762.000	32.0000	812.800	1.0000	25.400	30.750	781.05	31.250	793.75	0.080	2.03	1/2
SF350CP0*RBC	35.0000	889.000	36.5000	927.100	0.7500	19.050	35.563	903.30	35.938	912.83	0.080	2.03	3/8
SG350CP0*RBC	35.0000	889.000	37.0000	939.800	1.0000	25.400	35.750	908.05	36.250	920.75	0.080	2.03	1/2
SF400CP0*RBC	40.0000	1016.000	41.5000	1054.100	0.7500	19.050	40.563	1030.30	40.938	1039.83	0.080	2.03	3/8
SG400CP0*RBC	40.0000	1016.000	42.0000	1066.800	1.0000	25.400	40.750	1035.05	41.250	1047.75	0.080	2.03	1/2

*The alphanumeric identification system is used under license.

- 440C Stainless Steel
- Large Diameter
- Light Weight
- Small Cross Section
- Snap-Over Ball Separator

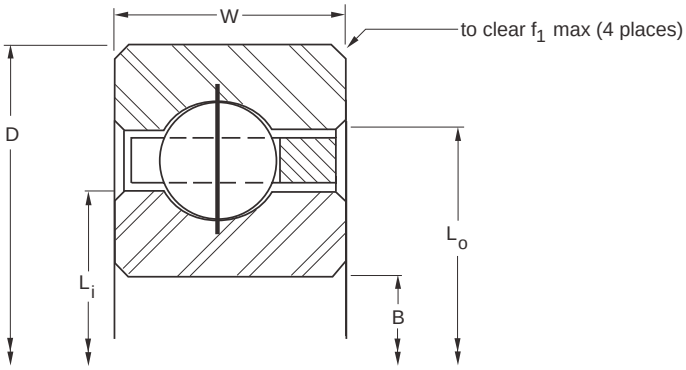

Ball Quantity	Approx. Weight		LOAD RATINGS												Limiting Speed (RPM)
			Radial				Thrust				Moment				
			Static		Dynamic		Static		Dynamic		Static		Dynamic		
	lbs.	kg	lbf	N	lbf	N	lbf	N	lbf	N	lbf - in	Nm	lbf - in	Nm	
135	0.52	0.236	3,410	15,170	1,030	4,580	5,110	22,730	2,980	13,260	11,500	1,300	6,700	760	1,780
113	0.75	0.340	4,590	20,420	1,464	6,510	6,700	29,800	4,130	18,370	15,160	1,710	9,340	1,060	1,770
91	1.16	0.526	5,470	24,330	1,879	8,360	7,800	34,700	5,280	23,490	17,750	2,010	12,020	1,360	1,760
69	2.06	0.934	7,870	35,010	3,180	14,150	12,100	53,820	9,220	41,010	27,830	3,140	21,210	2,400	1,740
47	4.80	2.177	13,260	58,980	5,833	25,950	18,790	83,580	16,610	73,880	44,160	4,990	39,040	4,410	1,700
36	8.60	3.901	19,700	87,630	10,360	46,080	29,980	133,360	30,060	133,710	71,940	8,130	72,140	8,150	1,670
147	0.56	0.254	3,720	16,550	1,078	4,800	5,560	24,730	3,080	13,700	13,620	1,540	7,550	850	1,630
123	0.83	0.376	5,000	22,240	1,539	6,850	7,290	32,430	4,270	18,990	17,940	2,030	10,530	1,190	1,620
99	1.25	0.567	5,950	26,470	1,974	8,780	8,480	37,720	5,470	24,330	20,980	2,370	13,550	1,530	1,620
75	2.25	1.021	8,550	38,030	3,320	14,770	13,140	58,450	9,630	42,840	32,840	3,710	24,070	2,720	1,600
51	5.20	2.359	14,390	64,010	6,105	27,160	20,340	90,480	17,200	76,510	51,860	5,860	43,850	4,950	1,570
39	9.30	4.218	21,340	94,930	10,690	47,550	32,350	143,900	30,990	137,850	84,100	9,500	80,580	9,100	1,540
143	1.05	0.476	5,810	25,840	1,680	7,470	8,450	37,590	4,520	20,110	24,180	2,730	12,930	1,460	1,400
115	1.52	0.689	6,910	30,740	2,154	9,580	9,820	43,680	5,800	25,800	28,240	3,190	16,680	1,880	1,390
87	2.73	1.238	9,920	44,130	3,460	15,390	15,180	67,520	10,030	44,620	44,020	4,970	29,100	3,290	1,380
59	6.00	2.722	16,650	74,060	6,620	29,450	23,410	104,130	18,090	80,470	69,050	7,800	53,380	6,030	1,360
45	10.80	4.899	24,620	109,520	11,280	50,180	37,080	164,940	32,710	145,500	111,250	12,570	98,140	11,090	1,330
163	1.20	0.544	6,620	29,450	1,812	8,060	9,620	42,790	4,800	21,350	31,370	3,540	15,670	1,770	1,230
131	1.73	0.785	7,880	35,050	2,321	10,320	11,160	49,640	6,050	26,910	36,550	4,130	19,830	2,240	1,220
99	3.10	1.406	11,290	50,220	3,688	16,410	17,230	76,640	10,500	46,710	56,850	6,420	34,660	3,920	1,210
67	7.10	3.221	18,900	84,070	7,104	31,600	26,480	117,790	19,000	84,520	88,690	10,020	63,630	7,190	1,190
51	12.30	5.579	27,910	124,150	11,820	52,580	41,810	185,980	34,270	152,440	142,150	16,060	116,530	13,170	1,180
183	1.35	0.612	7,440	33,090	1,936	8,610	10,780	47,950	5,050	22,460	39,490	4,460	18,490	2,090	1,090
147	1.94	0.880	8,840	39,320	2,478	11,020	12,510	55,650	6,390	28,420	45,960	5,190	23,480	2,650	1,090
111	3.48	1.579	12,650	56,270	3,933	17,490	19,260	85,670	10,870	48,350	71,270	8,050	40,200	4,540	1,080
75	7.90	3.583	21,160	94,120	7,557	33,620	29,560	131,490	19,980	88,880	110,840	12,520	74,910	8,460	1,070
57	13.70	6.214	31,190	138,740	12,367	55,010	46,540	207,020	35,660	158,620	176,870	19,980	135,510	15,310	1,050
203	1.50	0.680	8,250	36,700	2,053	9,130	11,940	53,110	5,260	23,400	48,520	5,480	21,370	2,410	980
163	2.16	0.980	9,800	43,590	2,626	11,680	13,850	61,610	6,670	29,670	56,430	6,380	27,170	3,070	980
123	3.85	1.746	14,020	62,360	4,164	18,520	21,320	94,840	11,380	50,620	87,400	9,870	46,680	5,270	980
83	8.90	4.037	23,420	104,180	7,986	35,520	32,620	145,100	20,570	91,500	135,390	15,300	85,380	9,650	960
63	15.80	7.167	34,470	153,330	13,044	58,020	51,240	227,930	36,780	163,610	215,210	24,320	154,490	17,460	950
203	2.69	1.220	12,200	54,270	2,962	13,180	17,200	76,510	7,300	32,470	87,290	9,860	37,070	4,190	790
153	4.79	2.173	17,440	77,580	4,689	20,860	26,410	117,480	12,260	54,540	134,690	15,220	62,530	7,060	780
103	10.90	4.944	29,060	129,270	8,963	39,870	40,270	179,130	21,910	97,460	207,390	23,430	112,830	12,750	780
78	19.50	8.845	42,680	189,850	14,591	64,900	63,110	280,730	40,100	178,370	328,150	37,080	208,540	23,560	770
243	3.21	1.456	14,610	64,990	3,260	14,500	20,560	91,460	8,000	35,590	124,910	14,110	48,610	5,490	660
183	5.73	2.599	20,860	92,790	5,153	22,920	31,540	140,300	13,440	59,780	192,420	21,740	82,010	9,270	660
123	13.00	5.897	34,700	154,350	9,828	43,720	47,960	213,340	23,620	105,070	294,970	33,330	145,270	16,410	650
93	23.30	10.569	50,890	226,370	15,963	71,010	74,940	333,350	42,510	189,090	464,640	52,500	263,580	29,780	650
143	15.10	6.849	40,350	179,490	10,603	47,160	55,610	247,370	24,970	111,070	397,620	44,930	178,510	20,170	560
108	27.10	12.292	59,100	262,890	17,195	76,490	86,680	385,570	44,120	196,260	624,100	70,510	317,650	35,890	560
163	17.20	7.802	45,990	204,570	11,302	50,270	63,300	281,570	26,530	118,010	515,930	58,290	216,240	24,430	490
123	30.80	13.971	67,310	299,410	18,307	81,430	98,590	438,550	47,080	209,420	808,420	91,340	386,040	43,620	490

Refer to the Engineering section for load and speed limitations.